PEUGEOT
PROFESSIONNELS

WARRANTY 2+2 YEARS

Get a free 2-year warranty

ABRASIVE CUT OFF SAW WITH ABRASIVE DISC

PTMR350

IN GOOD HANDS

TRANSLATION OF ORIGINAL INSTRUCTION MANUAL

DE / FR / PT / SP

WHO ARE WE?

Peugeot Professional Tools was born out of several obvious considerations.

The first was to combine the know-how of **Peugeot**, which has mastered the art of cutting since 1810, with the expertise of **Tivoly**, a metalworker since 1917, in order to create a wide range of machines and tools for construction and maintenance professionals.

It was also a natural step to want to serve craftsmen and small businesses driven by strong family and heritage values.

For these professionals, **Peugeot Outils Professionnels** offers machines and tools designed specifically for their needs. **These tools are reliable, durable,** and **can be repaired in France** and in countries under distribution agreements by local industrial and family partners.

Trustworthy equipment with a longer warranty, logistics, and **French after-sales service.** The assurance of dealing with the people who assembled these tools and know every part that goes into them inside out.

From exceptional projects to everyday work, these tools are designed to withstand the most demanding conditions and stand the test of time.

Peugeot Professional Tools was born out of one obvious fact: that our tools are in good hands. The hands of those who work behind the scenes and give their all to satisfy their customers.

Since 1810, many things have changed, but the hands have remained the same. The hands of enthusiasts, craftsmen, dedicated technicians and installers, workers who are proud of themselves and their achievements.

Peugeot Professional Tools: tools in good hands.

THANK YOU FOR YOUR PURCHASE.

We are delighted that you have chosen Peugeot Professional Tools. Every detail has been designed to offer you an exceptional experience, and we hope you enjoy using it as much as we enjoyed creating it for you.

Your trust is essential to us, and we are delighted to accompany you every step of the way in your experience with the Peugeot Professional Tools brand.

Your purchase comes with a 2-year warranty, extendable to an additional 2 years.

To benefit from this, register at www.peugeot-outils-pro.com

If you have any questions or need assistance, our team is available to provide you with the best possible service.

To contact our after-sales service, visit , call , or email .
+33(0)4.79.89.59.00

Thank you for choosing Peugeot Professional Tools. Your satisfaction is our priority.

CONTENTS

1 INTRODUCTION 4
2 PICTOGRAMS 4
2.1 MACHINE SAFETY PICTOGRAMS 4
2.2 PICTOGRAMS USED IN THIS INSTRUCTION MANUAL 4
3 SAFETY 5
3.1 GENERAL SAFETY REQUIREMENTS 5
3.2 SPECIAL SAFETY REQUIREMENTS 6
3.3 OPERATOR PROTECTION 7
4 DESCRIPTION AND OPERATION 7
4.1 INTENDED USE OF THE MACHINE 7
4. CHARACTERISTICS 7
4.3 MACHINE DESCRIPTION 8
5 INSTALLATION 9
5.1 PACKAGING 9
5.2 HANDLING AND TRANSPORT 9
5.3 MACHINE INSTALLATION 9
6 ASSEMBLY 10
6.1 INSTALLATION/REPLACEMENT OF THE ABRASIVE DISC 10
6.2 ELECTRICAL CONNECTION 11
6.3 INITIAL TESTING AND INSPECTION BEFORE FIRST USE 11
7 USE 12
7.1 ADJUSTMENTS 12
7.2 CUTTING PROCEDURE 14
7.3 OPERATING INCIDENTS 15
7.4 TABLE OF FAULTS AND SOLUTIONS 15
8 MAINTENANCE 16
8.1 DAILY MAINTENANCE 16
8.2 WEEKLY MAINTENANCE 16
8.3 MONTHLY MAINTENANCE 16
8.4 LUBRICATION 16
8.5 CARBON BRUSHES 17
8.6 DECOMMISSIONING THE MACHINE 17
9 CONSUMABLE 17
10 EXPLODED VIEW 18
11 ELECTRICAL DIAGRAM 21
12 SOUND LEVEL 22
13 VIBRATION LEVEL 22
14 ENVIRONMENTAL PROTECTION 23
15 WARRANTY 23
16 DECLARATION OF CONFORMITY 24

1 INTRODUCTION

For safety reasons, read these instructions carefully before using this machine.
Failure to follow the instructions will result in damage to persons and/or the machine.

This instruction manual is intended for the operator, adjuster, and maintenance technician.

This instruction manual is an important part of your equipment. It provides rules and guidelines that will help you use this machine safely and efficiently. You must familiarize yourself with the functions and operation by reading this instruction manual carefully. For your safety, it is particularly important that you read and observe all recommendations on the machine and in this instruction manual.

These recommendations must be strictly followed at all times when using and maintaining the machine. Failure to follow the safety guidelines and warnings in the instruction manual and on the machine and/or use other than that recommended in the instruction manual may result in machine failure and/or injury.

Please keep this instruction manual with the machine or in a place that is easily accessible at all times for future reference. Ensure that anyone involved in the use of this machine can consult it periodically. If the instruction manual is lost or damaged, please contact us or your dealer to obtain a new copy.

Always use PEUGEOT OUTILS PROFESSIONNELS components and parts. Replacing components or parts other than PEUGEOT OUTILS PROFESSIONNELS may cause damage to the machine and endanger the operator.

This manual describes the safety instructions to be followed by the user. It is the responsibility of the employer or user, in accordance with Article L.4122-1 of the Labor Code, to take care of their health and safety and that of other persons affected by their actions or omissions, in accordance, in particular, with the instructions given to them.
The employer must carry out an assessment of the specific risks associated with their activity, must train workers in the use of the machine and in the prevention of these risks, and must appropriately inform workers responsible for the use or maintenance of work equipment of the instructions or guidelines concerning them.

.

2 PICTOGRAMS

2.1 MACHINE SAFETY PICTOGRAMS

Meaning of the safety pictograms affixed to the machine (keep them clean and replace them when they are illegible or detached):

- Wearing protective eyewear is mandatory
- Hearing protection must be worn
- Safety shoes must be worn
- Protective gloves must be worn
- Respiratory mask must be worn
- Read the instructions carefully
- Danger, risk of cuts when in contact with the abrasive disc
- Do not wear loose clothing, wide sleeves, jewelry, bracelets, watches, wedding rings, etc.
  Wear hair nets for long hair
- Electrical presence
- Direction of rotation of the abrasive disc
- Ground connection for metal parts

2.2 PICTOGRAMS IN THIS INSTRUCTION MANUAL

- Direct danger to persons and damage to the machine.
- Possible damage to the machine or its surroundings.
- For band replacement and cleaning operations, wear protective goggles and gloves.
- Minimum number of personnel required for certain operations.
- If necessary, wear respiratory protection to reduce the risk of inhaling hazardous dust.
- Note.
- Technical skill level: operator, user.
- Technical skill level: adjuster, maintenance.
- Technical skill level: maintenance technician.

Electrical work must be carried out by personnel who are qualified and authorized to perform low-voltage electrical work.

3 SAFETY

3.1 GENERAL SAFETY REQUIREMENTS

To reduce the risk of fire, electric shock, mechanical shock, and personal injury when using power tools, follow basic safety precautions.

This instruction manual only takes into account reasonably foreseeable behavior.

Our machines are designed and manufactured with the operator's safety in mind.
The machine must not be used by young workers under the age of eighteen.

We accept no liability for any damage caused by inexperience, incorrect use of the machine and/or damage to it and/or failure to comply with the instructions and safety rules contained in this instruction manual.
As a general rule, accidents always occur as a result of misuse or failure to read the instruction manual.
We remind you that any modification to the machine will result in our withdrawal of liability.

Check the presence, condition, and operation of all guards before starting work.
Ensure that moving parts are working properly, that there are no damaged components, and that the machine is in perfect working order during start-up.
Only competent and authorized personnel are permitted to repair or replace damaged parts.

Keep the work area clean and tidy.
Ensure that the entire work area is visible from the work position.
Cluttered work areas and workbenches are a potential source of injury.
Do not use the machine outdoors when weather and environmental conditions do not permit it or in very humid locations . Reserve it for indoor use, in a dry, well-ventilated area free from flammable liquids or gases.
Position the machine in a sufficiently lit work area.
Do not allow unauthorized persons, especially children and animals, to touch the tools or electrical cables, and keep them away from the work area.
Turn off the machine when you have finished using it. Always disconnect the power supply.
Never leave the machine unattended while it is running. Only leave the machine when it has come to a complete stop.

Do not force the disc; it will perform better and be safer at the speed for which it is designed.
Do not use discs for work for which they are not intended.

Do not damage the power cord.
Never pull on the power cord to remove it from the electrical outlet.
Keep the power cord away from heat sources, greasy areas, and/or sharp edges.
Protect the power cord from moisture and any potential damage.
Check the power cord periodically. If damaged, have it repaired by an authorized repairer.
Defective switches must be replaced by a qualified person or an authorized repairer.
Do not use the machine if the switch does not control the stop or start functions.

Do not overestimate your strength.
Always maintain a stable position and good balance.
Be aware of what you are doing and use common sense.
Do not use the machine when tired.
Always use both hands to operate this machine.

The use of any accessories other than those described in the instruction manual may present a risk of injury to persons.

The user is responsible for their machine and must ensure that:

- The chainsaw is used by people who have read the instructions and are authorized to do so.
- Safety rules are followed.
- Users have been informed of the safety rules.
- Users have read and understood the instruction manual.
- Responsibilities for maintenance and any repairs have been clearly assigned and observed.
- Defects or malfunctions have been immediately reported to an authorized repairer or your dealer.
- The chainsaw must be used in the areas of application described in this manual.
- Any use other than that specified in this instruction manual may constitute a hazard.
- Mechanical and/or electrical guards must not be removed or bypassed.
- No modifications and/or conversions must be made.

PEUGEOT OUTILS PROFESSIONNELS declines all responsibility for damage caused to persons, animals, or objects as a result of failure to comply with the instructions and safety rules contained in this instruction manual.

3.2 SPECIAL SAFETY REQUIREMENTS

Special safety requirements for the band saw.

Before use, the machine must be correctly assembled.
Use the chainsaw indoors or on outdoor construction sites if weather conditions permit.
Do not plug in the chainsaw unless it is placed on a flat, stable surface that is free of obstacles and well lit.
Do not operate the chainsaw when the blade guard is removed.
Check that the movable blade guard is working properly.
Never block the movable blade guard.
The chainsaw is designed for occasional dry use on ferrous metals (steel, iron, cast iron) and stainless steel, with an appropriate blade.
For full cuts, reduce the stated capacities by 40%.
Only use discs recommended by PEUGEOT OUTILS PROFESSIONNELS.
Ensure that the disc selected is suitable for the material and the cross-section of the material to be cut.
Do not use this cut-off saw to cut non-ferrous metals, building materials, wood, PVC, or derivatives.
Ensure that the blade is correctly mounted with its reduction ring.
Check that the disc is tightened securely.
Do not use a damaged or deformed disc to avoid kickback.
Ensure that no wrenches are left on the cut-off saw before starting it.
Ensure that the switch is in the "off" position before plugging the cut-off saw into an electrical outlet.
Keep your hands away from the cutting areas when the machine is in operation.
Always hold the chainsaw with both hands while wearing protective gloves.
Never hold the material to be cut by hand; clamp it securely with the vise.
Check that the locking bolts on the adjustable rear jaw are tight before making a cut.
Always wear protective eyewear.
Wear hearing protection.
Wear respiratory protection to reduce the risk of inhaling hazardous dust.
Do not use cutting fluid.
Always keep your work area clean and uncluttered.
Always work in a stable position and maintain your balance.
Do not start cutting against the material.
Do not strike the disc against the material to be cut, but apply pressure gradually.
Do not touch the disc while it is moving.
Do not stop the disc with your hand.
Ensure that no one is in the path of debris and sparks caused by cutting.
Do not use the chainsaw continuously for more than 30 minutes.
In all cases, remain focused on the task at hand.
For all operations involving a risk of cuts, burns, pinching, entanglement, entanglement, crushing, in particular loading and unloading of materials to be cut, changing the blade, handling the material to be cut, stop the machine and wear protective gloves.
Rushing rarely saves time. The work is poorly done. The risk of accidents is increased.
Do not add additional accessories for operations for which they are not designed.
Using an inappropriate accessory increases the risk of accidents.
Before positioning or removing waste material, stop the machine by setting the switch to the "off" position.
Disconnect the power supply for any major operations (maintenance, servicing, etc.).
Always keep the disc clean.
Do not clean the disc while it is moving.
When cutting is complete, release the switch and return the head to its starting position (rest, upward).
When the machine is turned off, the disc continues to rotate for a few seconds before coming to a complete stop.
The blade can become very hot during operation. Wait for the blade to cool before replacing it.
Always keep the construction saw clean, uncluttered, and in good condition.
Avoid allowing cut material to accumulate.
Keep the motor fan cover clean and uncovered to ensure the machine operates correctly.
To clean, remove debris while wearing protective goggles and gloves, with the machine turned off. Avoid using a blow gun; instead, use a clean, dry cloth, brush, long-handled brush, or hook.
Do not immerse the machine in water or wash it with a pressure washer, as this may cause water to enter the electrical components.
Do not use solvents or aggressive detergents for cleaning.
Disconnect the machine and check that the moving parts are locked when moving the chainsaw.
Store the machine in a dry place out of the reach of children, covering it with a waterproof cover.

Accidents are generally the result of:

- Lack of accessories to hold the material to be cut securely in place.
- Disorder: accessories, if available, are not stored away and the operator cannot find them, so does without them.
- Inappropriate or dangerous operating procedures.
- Insufficient training, learning, and/or experience of operators in the use of the machine.
- Absence of protective covers during machine use.
- Ill-fitting clothing, lack of safety glasses for certain tasks.

3.3 OPERATOR PROTECTION

For operator safety, ensure that non-working parts are always covered by a protective guard.

This machine is designed for a single operator.
The operator must wear appropriate personal protective equipment:

- During use:
  - Safety glasses.
  - Hearing protection.
  - Safety shoes.
  - Protective gloves.
  - Respiratory protection.
- When cleaning the machine or changing the disc:
  - Safety glasses.
  - Safety shoes.
  - Protective gloves.

The operator must wear close-fitting clothing and, if necessary, hairnets for long hair.
The operator must not wear, for example:

- Loose-fitting clothing, wide sleeves.
- Bracelets, watches, wedding rings, jewelry, ties, scarves.
- Any other objects that could become caught in the moving parts of the machine.

4 DESCRIPTION AND OPERATION

4.1 INTENDED USE OF THE MACHINE

The PTMR350 construction site cut-off saw is a machine designed and manufactured solely for occasional use (2 hours/day) for dry cutting of profiled or solid ferrous metals (steel, iron, cast iron) and stainless steel using a suitable blade.
For cutting solid materials, reduce the stated capacities by 40%.

The manufacturer declines all responsibility in the event of misuse or cutting materials not recommended for the disc.
Under proper conditions of use and maintenance, safe operation and work are guaranteed for several years.
To do this, explore the machine's various functions.

Do not use this machine to cut non-ferrous metals (copper, aluminum, lead, zinc, tin, brass, etc.), building materials (concrete, cinder block, paving stone, stone, etc.), wood, PVC, or derivatives.

4.2 CHARACTERISTICS

- Dry cutting of ferrous metals on construction sites
- Self-closing mobile disc guard
- Quick-release clamp
- 45° left-hand swivel jaws
- Shaft locking pin for easy blade removal
- Head locking pin for transport
- Safety switch
- Anti-interference filter
- Dust and spark collector
- Supplied with:
  - Service wrench
  - Abrasive disc

Cutting capacities (mm)	Round	Square	Rectangular (L x H)	Vise opening (mm)	Disc dimensions (mm)	Rotation speed (rpm)	Power supply	Motor power (kW)	Weight (kg)	Dimensions (L x W x H) (mm)
90	120	105	125 x 105	240	350 x 3 x 25.4	3400	230 V single-phase	2.2	20.6	500 x 280 x 410
45° G	100	90	90 x 100							

4.3 MACHINE DESCRIPTION

Figure 1

1. Handle
2. ON/OFF switch
3. Motor fan cover
4. Movable disc guard
5. Abrasive disc
6. Depth stop
7. Swiveling front vise jaw
8. Vise spindle
9. Vise support base
10. Vise crank
11. Base
12. Foot
13. Chip tray
14. Adjustable rear vise jaw
15. Dust and spark collector
16. Fixed disc guard

5 INSTALLATION

5.1 PACKAGING

A small moisture-proof bag may be included in the packaging. Keep it out of the reach of children and throw it away.

The construction site chainsaw is packaged and supplied with an abrasive disc in a cardboard box for easy handling, transport, and storage.
When unpacking, remove each component of the construction saw, check its overall condition, and then proceed with assembly.
The saw head is locked in the down position for transport purposes using a head locking pin. To move the head upwards, simply pull the motor housing pin.

Check that the machine is clean.
If the product does not appear to be in good condition or if any parts are broken or missing, contact your dealer.
Keep the instruction manual for future reference.

5.2 HANDLING AND TRANSPORT

Given the weight (20 kg) and dimensions of the machine, handling and installation can be carried out by a single person.
To transport the construction site chainsaw, always lock the cutting head in the down position using the head locking pin (A) provided for this purpose. A handle makes it easy to carry.

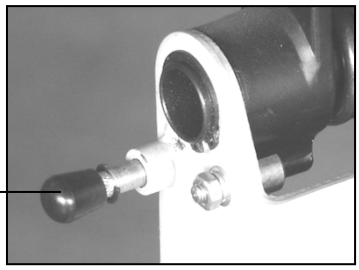

5.3 INSTALLATION OF THE MACHINE

Installation environment:

- Power supply voltage in accordance with the machine's specifications.
- Ambient temperature between +5°C and +35°C.
- Relative humidity not exceeding 90%.
- Sufficient ventilation at the installation site.
- Work area sufficiently lit for safe working: lighting must be 500 LUX.

Consider the location of the machine in the room; it must allow for easy movement and maneuvering. Maintain a minimum distance of 800 mm between the rear of the machine and the wall.
Position the machine on a flat, horizontal surface so that it is as stable and level as possible.
Use machine support frames with sufficient capacity.
To make cuts in accordance with ergonomic criteria, the ideal height is one that allows the vise to be positioned approximately 90/95 cm from the floor.
Ensure that no one is in the path of debris and sparks caused by cutting.

6 ASSEMBLY

6.1 ASSEMBLY/REPLACEMENT OF THE ABRASIVE DISC

Disconnect the machine from the power supply before performing this operation.

Never install a damaged, warped, twisted, cracked, or chipped disc (risk of kickback).
Fit a disc that complies with the machine's recommendations for use (Ø350 mm, thickness 3 mm, bore 25.4 mm).

To ensure fast cutting and long motor life, it is essential to use original PEUGEOT OUTILS PROFESSIONNELS discs.

Only use abrasive discs recommended by PEUGEOT PROFESSIONAL TOOLS with a speed rating equal to or greater than the speed indicated on the machine's nameplate.

The maximum thickness of the disc is 3 mm.

The disc may become very hot during machine operation. Wait for the disc to cool before replacing it.

Protective gloves must be worn.

Procedure:

1. Disconnect the machine from the power supply.
2. Ensure that the chainsaw head is in the raised position.
3. Unscrew the two screws on the disc guard (A).
4. Remove the central guard (B).
5. Lift the movable disc guard (C).
6. Turn the blade (D) and lock it in place using the shaft lock lever (E).
7. Once the blade shaft lock lever (E) is engaged, use the wrench on the blade axle bolt and turn it counterclockwise to loosen it.
8. Remove the axle bolt, washer, and outer disc flange.
9. Carefully remove the disc (D).
10. Ensure that the disc bearing surfaces are clean and free of foreign particles.
11. Fit the reduction ring onto the new abrasive disc.
12. Install the new disc on the inner flange.
13. Reinstall the outer disc flange, washer, and axle bolt.
14. Tighten the axle bolt clockwise with the wrench, ensuring that the disc shaft lock lever (E) is engaged.
15. Disengage the disc shaft lock lever (E).
16. Lower the mobile disc cover (C).
17. Replace the central disc guard (B).
18. Tighten the two screws (A).
19. Ensure that the disc is not mounted at an angle.

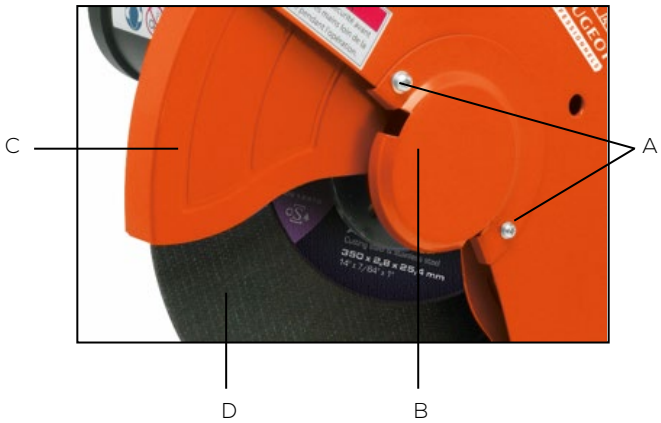

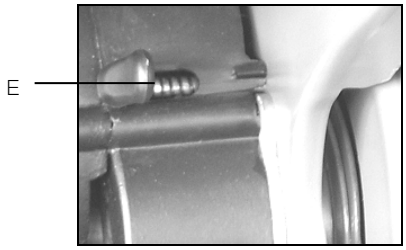

+

Do not remove the inner flange from the disc.
When reassembling the disc, ensure that the clamping flanges and axle bolt are clean. Only use original flanges.

After tightening the disc, always turn the disc backwards with the tightening wrench to help release the disc locking lever.

6.2 ELECTRICAL CONNECTION

Electrical work must be carried out by qualified personnel authorized to perform low-voltage electrical work.

Before mounting the disc, check the direction of rotation of the motor (clockwise). Mount the abrasive disc once the direction of rotation of the motor has been checked.
A pictogram indicating the direction of rotation of the disc is located on the disc housing.
The warranty does not cover damage caused by incorrect connection.

ELECTRICAL PRESENCE

Ensure that the power supply voltage of the installation corresponds to that of the machine.
Connect the power supply using the machine's power cable.
Check that the electrical outlet of the installation is compatible with the machine plug (2P+T) .
The socket used for the connection must comply with the "EN 60309-1" standards.
Check that the electrical installation to which the machine will be connected is properly earthed in accordance with current safety standards.
We remind the user that there must always be a magnetothermal protection device upstream of the electrical installation to protect all conductors against short circuits and overloads.
This protection must always be selected based on the electrical characteristics of the machine, as specified on the nameplate:

- Voltage: 230 V single-phase
- Frequency: 50 Hz
- Motor power: 2.2 kW
- Intensity: 10 A
- Protection rating: IP 20

Use of the machine with a damaged cable is strictly prohibited.
Regularly check the condition of the power cord, switch, and cable gland.

Use cables and cable reels with a cross-section and length appropriate for the power of the machine and unwind them completely.
Electrical connections and extension cords must be protected from splashes and kept on dry surfaces.

For outdoor use, cables and cable reels are subject to specific standards and approvals. Check them before use.

Do not remove the plug from the electrical outlet by pulling on the cord; pull only on the plug.

6.3 INITIAL TEST AND INSPECTION BEFORE FIRST USE

- Check that the chainsaw is on a flat, horizontal surface so that it is as stable and level as possible.
- Check that the moving parts are working properly and that there are no damaged components.
- Check that the guards are in place, intact, and in good working order.
- Check the condition of the blade.
- Check the blade head descent, blade guard, and clamp.
- Check that the machine operates perfectly when empty.

7 USE

Before starting operation, familiarize yourself with the control devices.

Before performing any maintenance or servicing, disconnect the power supply.

7.1 ADJUSTMENTS

Disconnect the machine from the power supply before performing these operations.

A. Angle cuts

The chainsaw can be used to make cuts at 0°, 45° left, 30° right, and intermediate angles:

1. Loosen the locking bolts on the adjustable rear jaw (A).
2. Turn the rear jaw (B) to the desired angle.
3. Tighten the locking bolts on the rear jaw (A).
4. The front jaw (C) pivots into the intended position and automatically aligns with the material.

✓ It is also possible to move the adjustable rear jaw (A) vertically by unscrewing the locking bolts (e.g., for 30° right cuts).

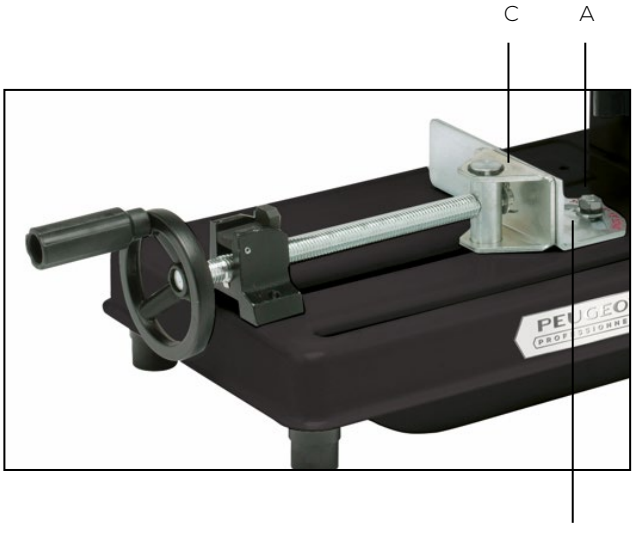

B. Vise assembly

The vise has a quick-release clamp:

1. Place the material to be cut against the rear adjustable clamp jaw at the desired cutting angle.
2. Flip the release lever (A) backward to release the vise pin.
3. Slide the pivoting front vise jaw toward the material to be cut to engage it.
4. Flip the release lever (A) forward to lock the vise pin.
5. Tighten the vise completely using the crank handle.

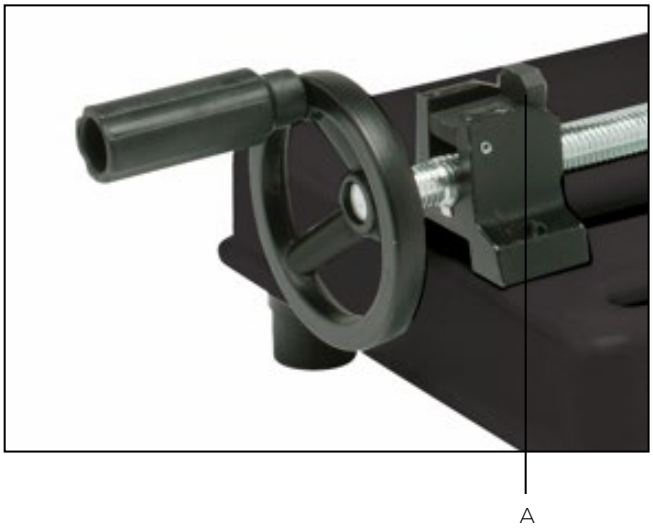

C. Clamping the material to be cut

Do not place materials to be cut on the vise assembly:
- **During cutting.**
- **When a profile is already inserted in the vise.**

1. Open the vise sufficiently.
2. Measure the material and mark the cutting line.
3. Place the material to be cut between the jaws.
4. Align the material to be cut with the disc and the adjustable rear vise jaw.
5. Clamp the material as described above.

- To ensure precise cuts, optimum performance, and increased blade life, the figures opposite show the recommended positioning of profiles in the vise (for straight cuts at 0°).
- Always cut on the thinnest side of the material.

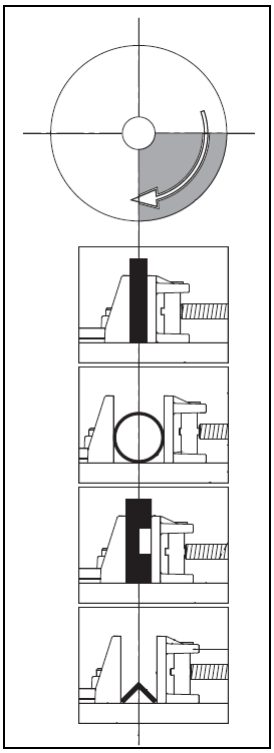

D. Disc downward stroke

The downward stroke can be adjusted using the depth stop:
1. Loosen the lock nut (A).
2. Tighten or loosen the stop screw (B) as needed.
3. Then retighten the lock nut (A).

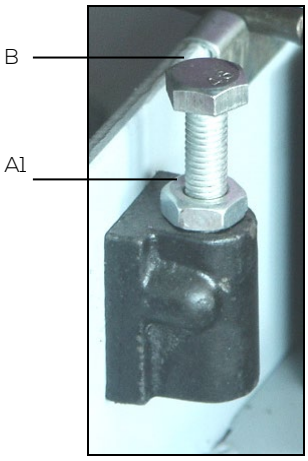

The stop screw (B) must not be tightened too far, as this will cause the disc to cut into the chip tray. Ensure that the stop screw is always at the correct height before starting the machine.

7.2 CUTTING PROCEDURE

Wearing appropriate personal protective equipment is mandatory.

Keep hands away from cutting areas when the machine is in operation.
Stop the machine before positioning the profile or removing cutting waste.

Always use the vice: the materials to be cut must be securely clamped in the vice to prevent any projections.

Never touch the disc locking lever during operation.

When cutting, there is a risk of sparks or hot metal debris being projected.

Before using the machine, ensure that:
- **The disc locking lever is disengaged.**
- **The disc tightening wrench has not been left on the axle bolt.**
- **Both disc guards are in place on the protective housing.**

When cutting solid materials, reduce the stated capacities by 40%.

Operating cycle

A. Cutting instructions:

1. Set the rear jaw to the desired cutting angle.
2. Adjust the depth stop.
3. Open the front jaw sufficiently.
4. Position the material in the vise at the desired length.
5. Secure the material properly.
6. Press the switch (A) to start the motor and allow the blade to reach its maximum speed.
7. Lower the head slowly toward the material to be cut, applying constant and correct pressure, avoiding any sudden contact.
8. If the cut is made with excessive force, the disc will tend to bend and the cut will be skewed.
9. Do not stand in front of the blade, but slightly to the side.

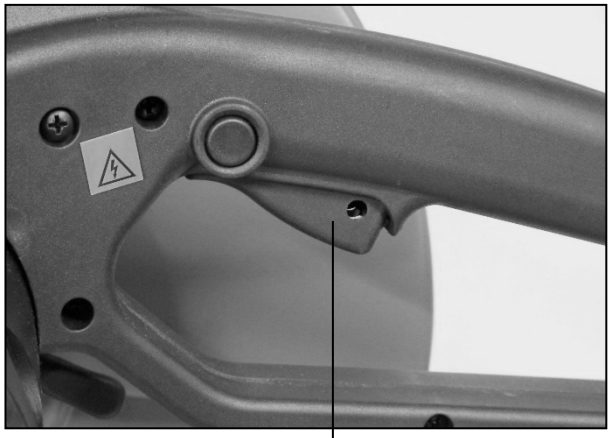

Allow the blade to reach its maximum speed before starting to cut.
Do not brake or block the blade by applying excessive pressure.

Wait until the blade has come to a complete stop before unblocking any material or changing the cutting angle.

B. Stopping:

1. Raise the head when cutting is complete.
2. Release the switch (A) to stop the machine. The blade will continue to rotate for a few seconds before coming to a complete stop.
3. After cutting, return the head to its initial position.
4. Open the clamp.
5. Push back the material to be cut or remove it.

When cutting is complete, release the switch and return the head to its starting position (rest, upward).

7.3 OPERATING INCIDENTS

Disc jamming in the material

Disconnect the machine from the power supply before performing this operation.

Protective gloves must be worn.

1. Release the switch.
2. Disconnect the machine.
3. Carefully open the vise.
4. Carefully lift the disc head.
5. Carefully remove the material.
6. Check that the disc is not damaged.

Replace the disc if it is damaged.

7.4 TABLE OF FAULTS AND SOLUTIONS

FAULTS	SOLUTIONS
Premature disc wear:	Inappropriate disc. Apply constant and correct pressure.
Disc vibration during cutting:	Apply constant and correct pressure. Replace the disc. Hold the material more firmly.
Insufficient surface finish:	Apply constant and correct pressure. Replace the disc.
Convex or concave surfaces obtained:	Apply constant and correct pressure. Replace the disc.
Insufficient sawing speed:	Apply constant and correct pressure. Replace the blade.
Non-perpendicular cut:	Do not force the cut; let the blade do the work.
The motor lacks power:	Increase the cross-section of the extension cable. Resolve the drop in power supply voltage. Do not force the cut; let the blade do the work.
The motor has stopped and will not restart:	Do not force the cut, let the blade do the work. Increase the cross-section of the extension cable due to motor overload. Resolve the drop in power supply voltage. Replace the carbon brushes.

8 MAINTENANCE

Before performing any maintenance or servicing, disconnect the machine.
For cleaning, remove debris (especially chips) while wearing protective goggles and gloves, with the machine turned off. Avoid using a blow gun; instead, use a clean, dry cloth, brush, long-handled brush, or hook.

Do not use an air gun to remove debris.
Do not use solvents or aggressive detergents for cleaning.
Do not immerse the machine in water or wash it with a water jet.

Chips are often very sharp and hot. Do not touch them with your bare hands.

To maintain the efficiency of the machine and its components, it is necessary to perform maintenance.
Below are the most important maintenance tasks, which can be classified according to their frequency as daily, weekly, or monthly tasks.

Failure to perform the prescribed tasks will result in premature wear and tear and reduce the performance of the machine.

8.1 ●○○ DAILY MAINTENANCE

- Clean the machine as normal to remove any debris and dust that has accumulated.
- Check that the abrasive disc is not worn.
- Check that the protective covers and switch are working properly.
- If the machine is left outdoors, cover it with a waterproof cover.

8.2 ●●○ WEEKLY MAINTENANCE

- Thoroughly clean the machine to remove any chips.
- Check that the protective covers and controls are working properly, looking for any defects.

8.3 ●●● MONTHLY MAINTENANCE

- Check that the screws on the motor and protective covers are tight.
- Check and replace the power cable if necessary.

8.4 ●●○ LUBRICATION

Lubricate your machine once a month to extend its service life:
- Rotating part of the vice, sliding part of the vice, rotating part of the motor shaft (use machine oil).
- Head lift shaft.
- All bearings are lubricated for life.

8.5 BRUSHES

Disconnect the machine from the power supply before performing this operation.

Always replace the carbon brushes in pairs.

For a simple check, make sure to replace the carbon brushes correctly as they were originally installed.

The service life of the carbon brushes varies depending on the motor load, but is at least 50 hours of use.
Check the carbon brushes after the first 50 hours of use.
After the first check, examine them every 10 hours.

The carbon brushes are located on either side of the motor:

1. Unscrew the plastic brush covers located on each side of the motor (A).
2. Remove the carbon brushes.
3. Clean the brush holders.
4. Install new brushes.
5. Screw the plastic brush covers back on (A).

- When a carbon brush is less than 1 mm long or has burned out, or when the spring is bent, replace both carbon brushes.
- Do not swap the carbon brushes after checking them.

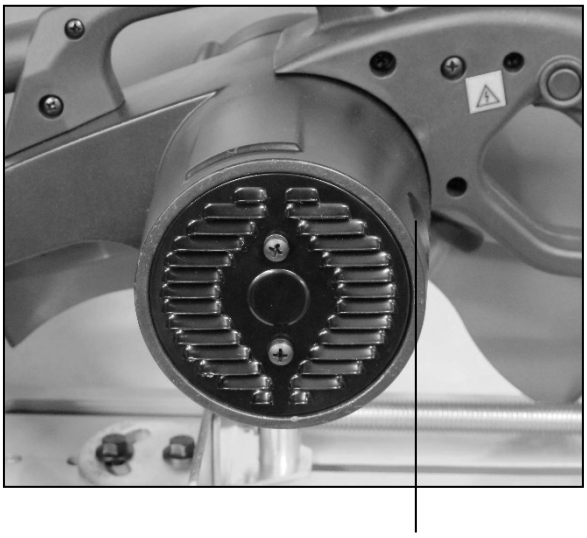

8.6 TAKING THE MACHINE OUT OF SERVICE

If the chainsaw is not going to be used for an extended period of time, it is recommended to proceed as follows:

1. Disconnect the plug from the power supply.
2. Loosen the disc.
3. Clean the machine carefully.
4. Cover the machine, if necessary.

9 CONSUMABLE

ABRASIVE DISC

✓ To ensure fast cutting and long motor life, it is essential to use original PEUGEOT OUTILS PROFESSIONNELS discs.

	Ø x Thickness x Bore (mm)	**Reference**
XPLR+LCT	350 x 3 x 25.4	PPA4014355080

10 EXPLODED VIEW

EXPLODED VIEW PTMR350 (VIEW 01)

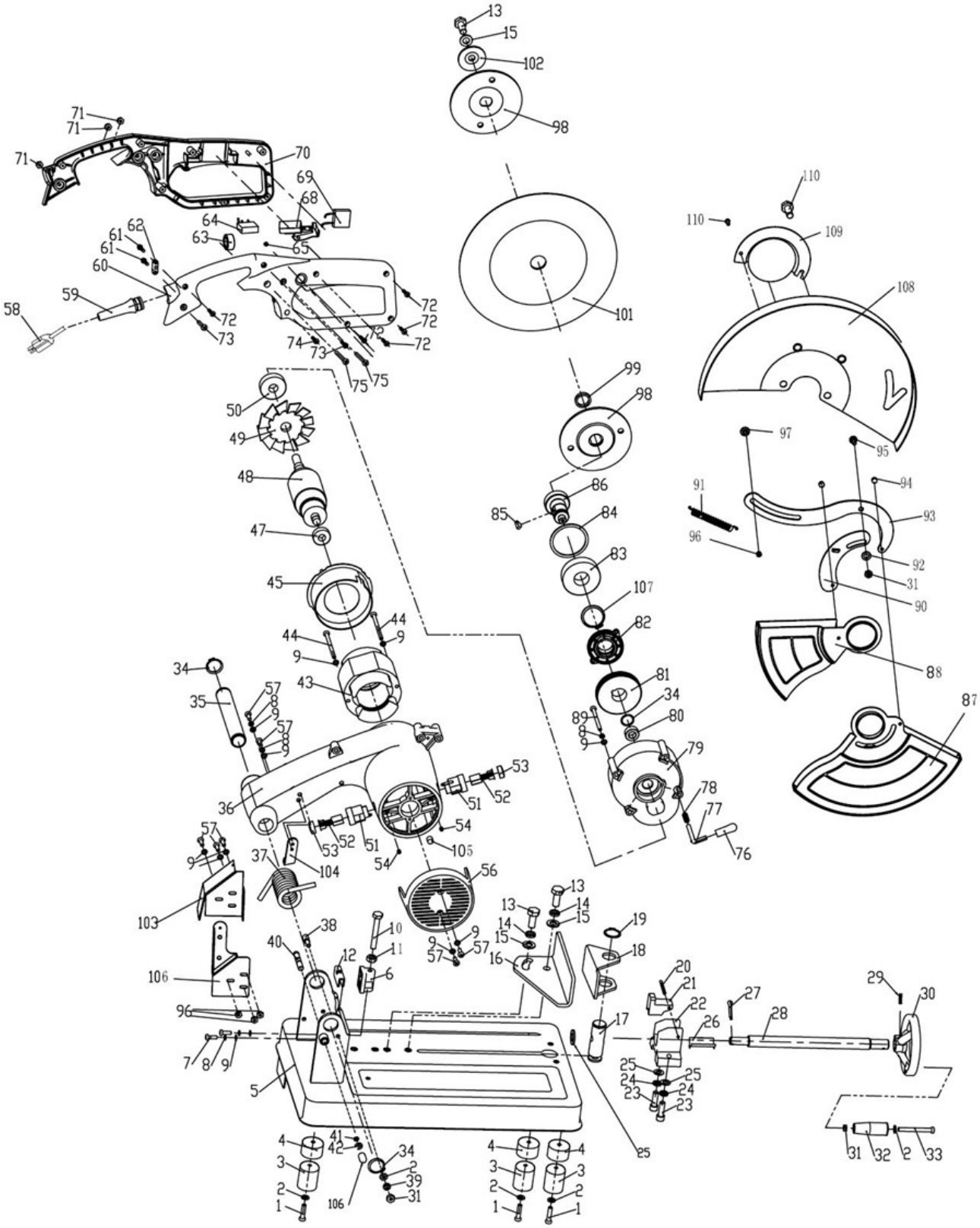

EXPLODED VIEW NOMENCLATURE PTMR350 (VIEW 01)

Reference	Description	Quantity
1	M6x25 SCREW	3
2	FLAT WASHER Ø6	6
3	RUBBER FOOT	3
4	FOOT COVER	3
5	BASE #RAL 9004	1
6	DEPTH STOP SUPPORT	1
7	M5x12 SCREW	2
8	Ø5 LOCK WASHER	8
9	FLAT WASHER Ø5	15
10	M8x60 BOLT	1
11	M8 NUT	1
12	PLATE	1
13	M10x25 HEXAGON HEAD SCREW	3
14	BRAKE WASHER Ø10	2
15	FLAT WASHER Ø10	3
16	PIVOTING PLATE	1
17	CLAMP PIVOT SHAFT	1
18	VISE JAW	1
19	Ø22 CIRCLIPS	1
20	PIN	1
21	QUICK RELEASE LATCH	1
22	VISE BASE	1
23	M8x25 BOLT	2
24	Ø8 LOCK WASHER	2
25	M8 WASHER	3
26	LOCKING PLATE	1
27	M4x20 PIN	1
28	VISE SCREW SHAFT	1
29	M4x20 PIN	1
30	CLAMP WHEEL	1
31	M6 NUT	3
32	CRANK	1
33	M6x55 BOLT	1
34	Ø24 CIRCLIPS	3
35	MOTOR ARM SHAFT	1
36	MOTOR ARM (A)	1
37	MOTOR ARM SPRING	1
38	SCREW	1
39	BRAKE WASHER Ø6	2
40	PIN	1
41	O-RING	1
42	C-RING Ø6	1
43	STATOR	1
44	M5x75 BOLT	2
45	ENGINE COVER	1
47	BEARING 101	1
48	ROTOR (A)	1
49	WINGED WHEEL	1
50	BEARING 302	1
51	BRUSH HOLDER (A)	2
52	CARBON BROOM (A)	2
53	BROOM DOOR COVER (A)	2
54	M5x6 BOLT	2
56	ENGINE COVER	1
57	M5x15 BOLT	7
58	POWER CABLE	1
59	CABLE PASS	1
60	LOWER HANDLE PART (A)	1
61	ST 4.2x12 SCREW	2
62	POWER CABLE CLAMP	1
63	INTERFERENCE FILTER	1
64	CONDENSER	1
65	NUT	1
68	SWITCH (APR. 2012)	1
69	CONDENSER	1
70	UPPER HANDLE (B)	1
71	M5 NUT	6
72	ST 4.2x20 SCREW	1
73	M5x30 BOLT	1
74	M5 NUT	3
75	M5x50 SCREW	2
76	SHEATH	1
77	SHAFT LOCK	1

78	SPRING	1
79	GEAR BOX	1
80	SLEEVE	1
81	GEAR	1
82	COVER	1
83	BEARING 305	1
84	WASHER	1
85	KEY 5x7.5x19	1
86	SHAFT	1
87	FRONT DISC MOBILE HOUSING	1
88	MOBILE COVER #RAL 2008	1
89	M5x60 BOLT	4
90	CONNECTING ROD (B)	1
91	SPRING	1
92	M6 WASHER	1
93	CONNECTING ROD (A)	1
94	RIVET	2
95	BOLT (C)	1
96	M5 NUT	1
97	WASHER (B)	1
98	SET OF DISC FLASKS	2
99	REDUCER RING	1
100	BLOTTING PAPER	2
101	DISQ. TRUNK XPLR+DRT STAINLESS STEEL D.350 X 3 X 25.4	1
102	FLANGE	1
103	DEFLECTOR	1
104	PLATE	1
105	BRAKE ROD (A)	1
106	FIXED SUPPORT	1
107	CIRCLIPS Ø48	1
108	PROTECTIVE COVER	1
109	COVER	1
110	CLAMPING BOLT M8X12	2
110	BOLT	1

11 ELECTRICAL DIAGRAM

PTMR350 ELECTRICAL DIAGRAM

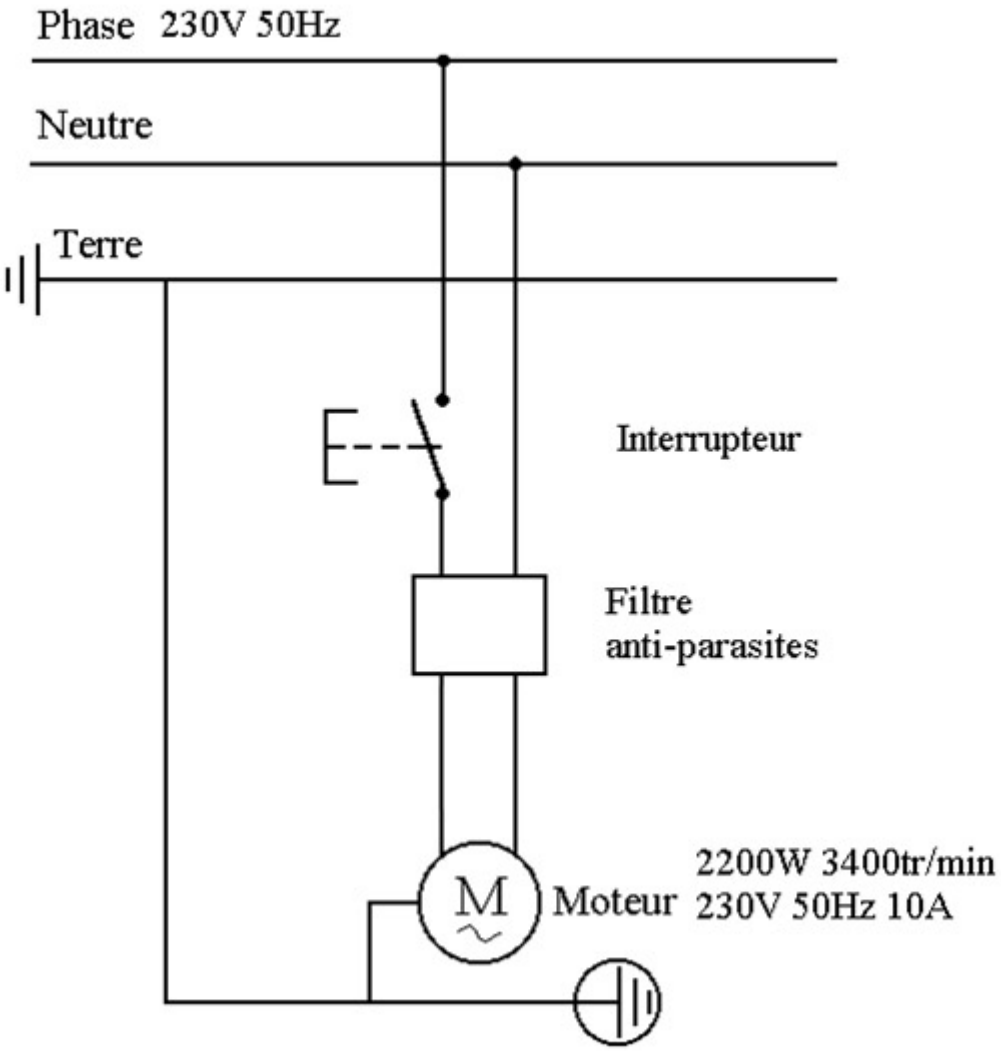

12 NOISE LEVEL

The noise level emitted by this machine during operation will depend on the type of material being ground and the type of grinding wheel. For this reason, the measurement data is relative.

The risk of hearing damage to the operator depends on the length of exposure to noise.
The operator must wear ear defenders or other appropriate personal protective equipment when the sound power exceeds 85 dB(A) in the workplace.

- Sound pressure level (1 m at no load):
  LpA = 96 dB(A)
- Sound power level (1 m at idle):
  LwA = 109 dB(A)

The sound power was calculated taking into account factors such as: reverberation at the test site, ground noise absorption, and other factors that may interfere with the measurements. This estimate allows us to state that the degree of error in the values obtained is around 3 dB(A).

The values given are emission levels and not necessarily levels that allow for safe working. Although there are correlations between emission levels and exposure levels, these cannot be used reliably to determine whether additional precautions are necessary. Parameters that influence actual exposure levels include workshop characteristics, other sources of noise, etc., i.e., the number of machines and neighboring manufacturing processes. In addition, permissible exposure levels may vary from country to country. However, this information allows the machine user to make a better risk assessment.

13 VIBRATION LEVEL

The data relating to the vibrations transmitted by this machine during the work process will depend on the type of material used and the type of disc. For this reason, the measurement data is relative.
Exposure to vibrations can have serious consequences for the health of workers. A person exposed daily to high-amplitude vibrations may develop neurological and joint disorders in the long term.
These values must be taken into account when assessing the level of exposure.
Regular and frequent exposure to a highly vibrating work disc exposes workers' hands and arms to chronic disorders known as "vibration syndrome."

- Average hand/arm vibration level:
  A(8) < 5.1 m/s²

The exposure level assessment is based on the calculation of the daily exposure value A(8), normalized to a reference period of 8 hours.
Whenever an employee is exposed to type A(8) vibrations exceeding the daily exposure action level set at 2.5 m/s², the employer must assess the risks of the task assigned to the employee and implement control measures.
Exposure values for vibrations transmitted to the hand-arm system:

- Daily exposure limit value:
  A(8) = 5 m/s²
- Daily exposure value triggering action:
  A(8) = 2.5 m/s²

14 ENVIRONMENTAL PROTECTION

Your machine contains many recyclable materials.
This logo indicates that used machines must not be mixed with other waste.
This will ensure that the machines are recycled under the best conditions, in accordance with European Directive 2012/19/EU on waste electrical and electronic equipment.
Contact your local council or dealer to find out where your nearest collection points for used machines are located.
Thank you for your cooperation in protecting the environment.

15 WARRANTY

If the machine is covered by warranty, it must be serviced exclusively by an authorized after-sales service center.
The machine warranty is valid for 2 years from the date of purchase by the user.
This product benefits from an additional 2-year warranty extension, provided that the user registers the product on the PEUGEOT OUTILS PROFESSIONNELS website (www.peugeot-outils-pro.com) within 30 days of the date of purchase. This warranty extension is subject to the same conditions as the initial warranty.
Accessories and consumables are not covered by the warranty.
It is important to keep the invoice, which serves as the warranty certificate.
The warranty is limited to the repair or replacement of defective parts free of charge, after evaluation by the manufacturer.
For any requests for information or spare parts relating to the machine, it is essential to provide the exact information shown on the nameplate.
The warranty does not cover damage caused by the user or by a repairer not approved by Tivoly.

Link to the General Warranty Terms and Conditions:

16 DECLARATION OF CONFORMITY

CE AL DECLARATION OF CONFORMITY "ORIGINAL"

The undersigned (Manufacturer/Importer):

TIVOLY

266 ROUTE PORTES DE TARENTAISE 73790 TOURS-EN-SAVOIE

Declares that the following new machine:

- Designation: ABRASIVE CUT OFF SAW WITH ABRASIVE DISC
- Brand: PEUGEOT OUTILS PROFESSIONNELS
- Model: PTMR350
- Reference: PPM00200001
- Serial number:

Complies with applicable harmonized legislation:

- **Machinery Directive 2006/42/EC (until January 19, 2027)**
- **EU Regulation 2023/1230 (from January 20, 2027)**

Complies with the essential safety requirements applicable to it:

- **Low Voltage Directive 2014/35/EU**
- **Electromagnetic Compatibility Directive 2014/30/EU**
- **WEEE Directive 2012/19/EU**
- **RoHS-2 Directive 2011/65/EU**
- **REACH 1907/2006**
- **Noise Directive 2003/10/EC**
- **Vibration Directive 2002/44/EC**

Done at TOURS-EN-SAVOIE
On

Stéphane Le Mounier
Managing Director

Person authorized to compile the technical file:

- Mr. LE MOUNIER – TIVOLY – 266 ROUTE PORTES DE TARENTAISE 73790 TOURS-EN-SAVOIE